We're More Than Cables
www.taisin.com.sg

Tai Sin®

Busbar Trunking System

LT LINE I - COPPER & ALUMINIUM SANDWICH BUSBAR TRUNKING SYSTEM

CATALOG 2021

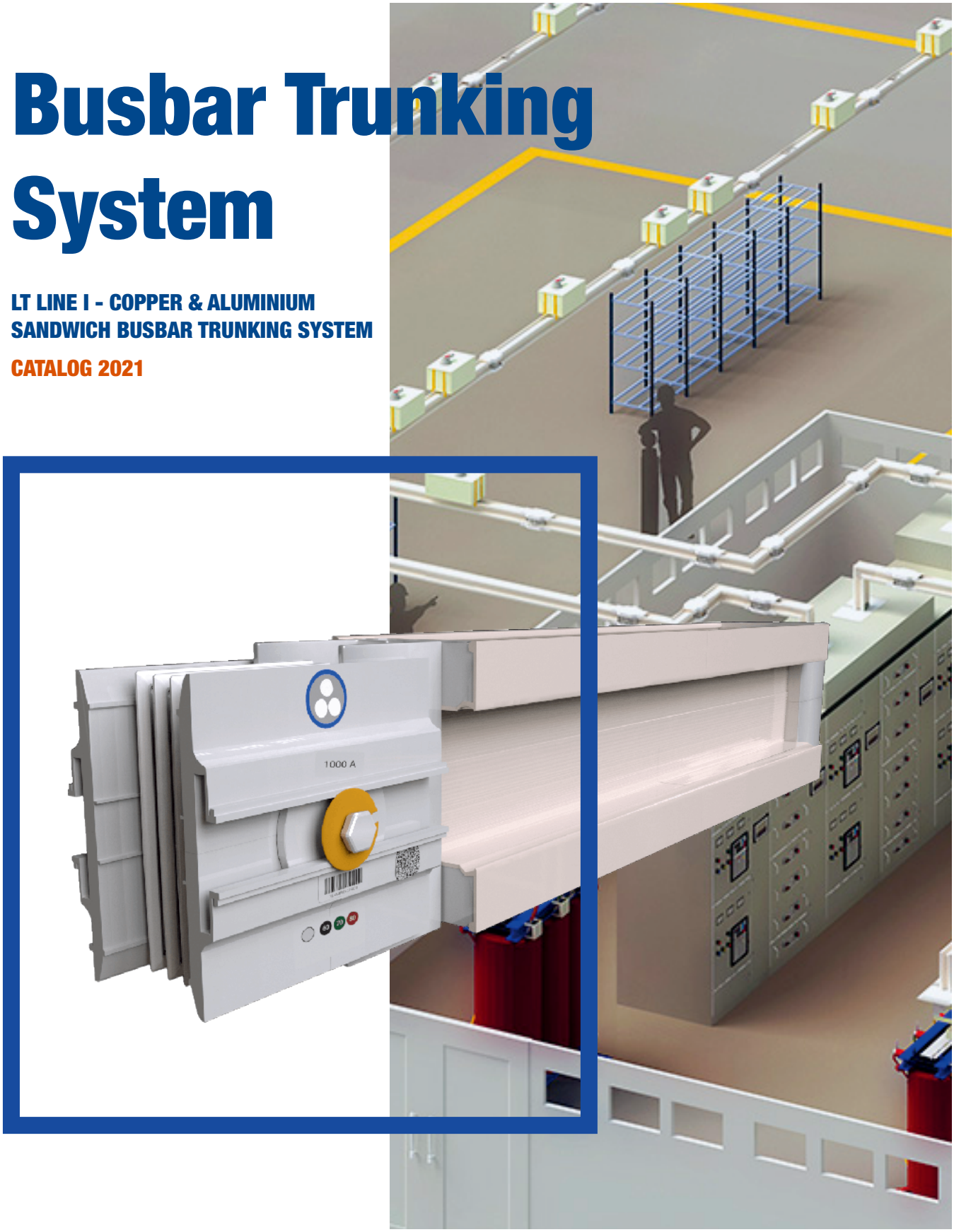

Content

Company Profile

Powering up Singapore since 1980

Tai Sin Electric Limited was incorporated in 1980, having its main business in the design and manufacturing of Industrial Power Cable & Wire serving a diverse range of industries in all categories of infrastructure, industrial, commercial, residential, data center, and telecommunication sectors.

Tai Sin operates three cable manufacturing plants, which are located in Singapore, Malaysia, and Vietnam with Singapore being the Headquarter of the Cable & Wire business. In 1998, the company was listed on the Stock Exchange of Singapore, SESDAQ, and subsequently transferred to the SGX Main Board in 2005

.

Our Busbar Trunking System with its sandwich construction offers you superior performance. It is safe and robust with high power efficiency, low voltage drop, and high tensile strength

In 2020, after 40 years of cable manufacturing success, Tai Sin launches its new range of low voltage Busbar Trunking System.

Our system offers a full line of busbar trunking system to meet most requirements. Offering 3P3W, 3P4W, 3P5W, supply and distribution, with rated current from 250A to 4000A (for aluminum conductor) & 400A to 5000A (for copper conductor), rated operation and insulation voltage up to 1000V, IP degree up to IP66 and the frequency 50~60Hz.

Being the first locally tested busbar trunking system supplier, we are committed to helping you obtain a reliable power distribution solution that meets both your budget and project timeline.

International Certification

Our products are certified for your peace of mind

Tai Sin LT Line I series busbar trunking system conforms to IEC 61439-6, certified by KEMA KEUR.

Full type test certification (IEC61439) for each and every ampere rating of busway

The first & only busbar trunking system designed and tested in Singapore

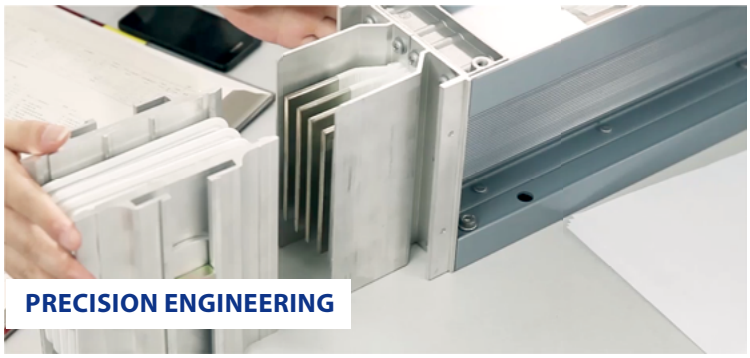

Applications

Designed to make your facility simpler, more efficient and flexible

Busbar trunking system, first introduced in 1932, solving the automation industries needs for flexible power distribution system.

Since then, Busbar Trunking System had evolved from Air Insulated design to today compact series "Sandwich design" and incorporating monitoring & control system in load distribution. The versatility of busbar trunking system design not only serves high-amperage application efficiently in terms of energy loss, it also provides high productivity in the implementation on site.

Today, busbar trunking system is widely used in all segments of development:
(1) Data Centre
(2) Industrial
(3) Commercial
(4) Residential
(5) Healthcare
(6) Infrastructure

Recognizing the needs for more efficient & flexible solution, Tai Sin Electric Limited, a renowned Cable & Wire manufacturer & specialist in Low Voltage Power Distribution system, developed a new range of Low Voltage Busbar Trunking System which is designed and tested in Singapore.

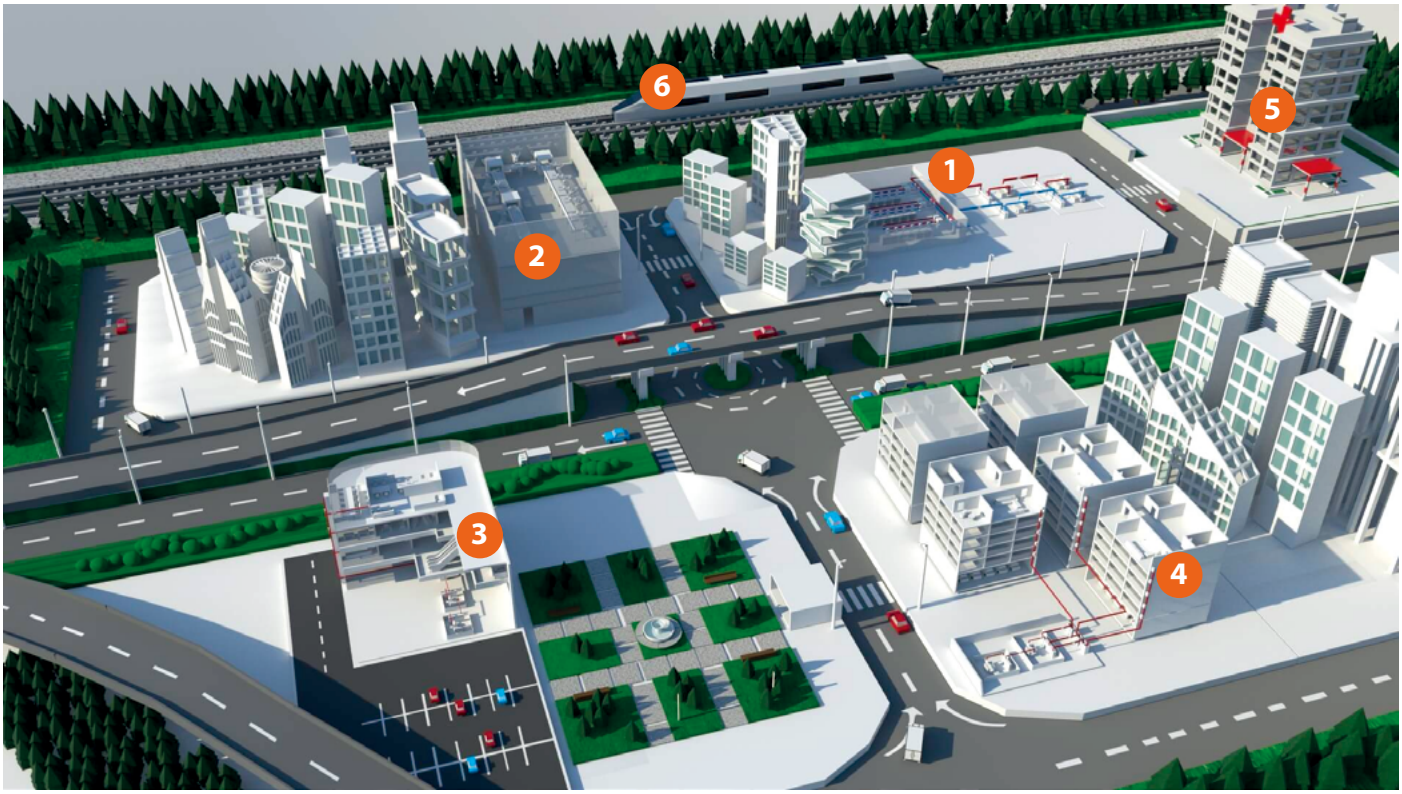

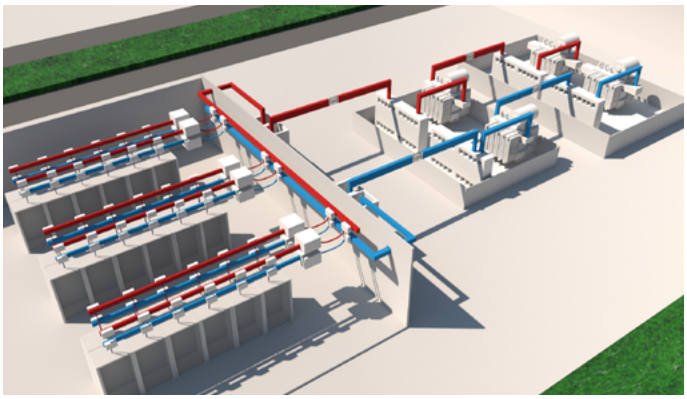

Data Center

- Service Continuity
- Halogen-free
- Flexibility To Evolve/Expand
- Customizable colour

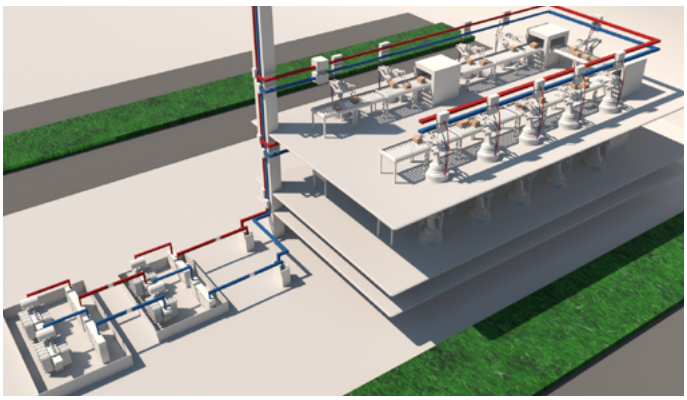

Industrial

- Service Continuity
- Flexibility To Evolve/Expand
- Halogen-free
- Low Voltage Drop
- Low Maintenance Frequency

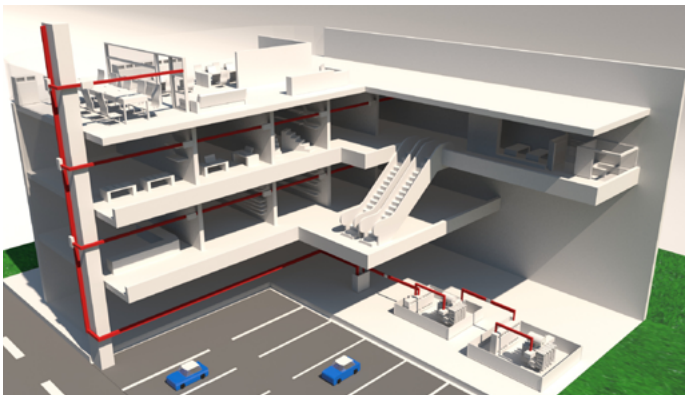

Commercial

- Service Continuity
- Flexibility To Evolve/Expand
- Halogen-free
- Low Voltage Drop
- Low Maintenance Frequency

Residential

- Service Continuity
- Halogen-free
- Low Maintenance Frequency

Healthcare

- Service Continuity
- Low Electromagnetic Compatibility
- Halogen Free
- Low Voltage Drop

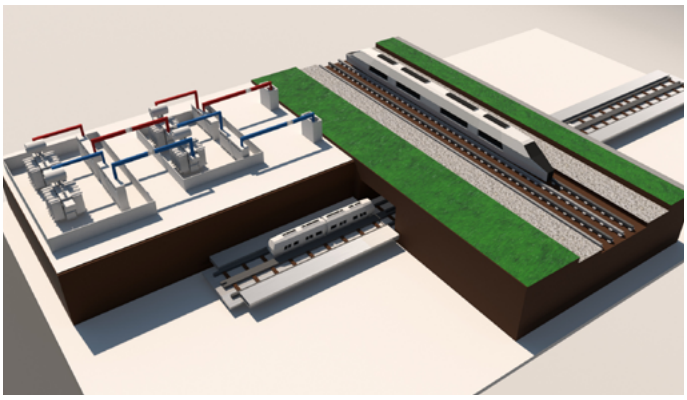

Infrastructure

- Service Continuity
- Model Availability
- Halogen-free
- Low Voltage Drop
- Low Maintenance Frequency
- Low Electromagnetic Compatibility

System Overview

Make the most of your energy

Tai Sin Low Voltage Busbar Trunking System is a reliable and efficient electrical distribution system with sandwich construction and superior performance. It is a safe and robust power distribution system with high electrical efficiency, low voltage drop, high mechanical strength.

The system offers a full line of busway to meet the world market: suitable for 3P3W, 3P4W, 3P5W, supply and distribution, with rated current from 250A to 4000A (for aluminum conductor) & 400A to 5000A (for copper conductor), rated operation voltage up to 690V(rated insulation voltage up to 1000V), IP degree up to IP66 and the frequency 50~60Hz.

Constructed with two-piece of extruded aluminum housing, Tai Sin Low Voltage Busbar Trunking System breaks the barrier of weight as one of the lightest systems in the business and offers you maximum flexibility. The full aluminum alloy housing, a low magnetic material, avoids hysteresis loss on the distribution system.

Tai Sin Low Voltage Busbar Trunking System provides longer life epoxy insulation as an option to polyester insulation.

Tai Sin Low Voltage Busbar Trunking System is an ideal choice for various applications including commercial, industrial electrical distribution, and other verticals.

From every aspect—performance, flexibility, quality, and customer value, Tai Sin Low Voltage Busbar Trunking System is a superior choice for your next installation.

1. Transformer Connection Unit
2. Wall Flange
3. Joint
4. Straight Length
5. Hanger
6. Flatwise Elbow

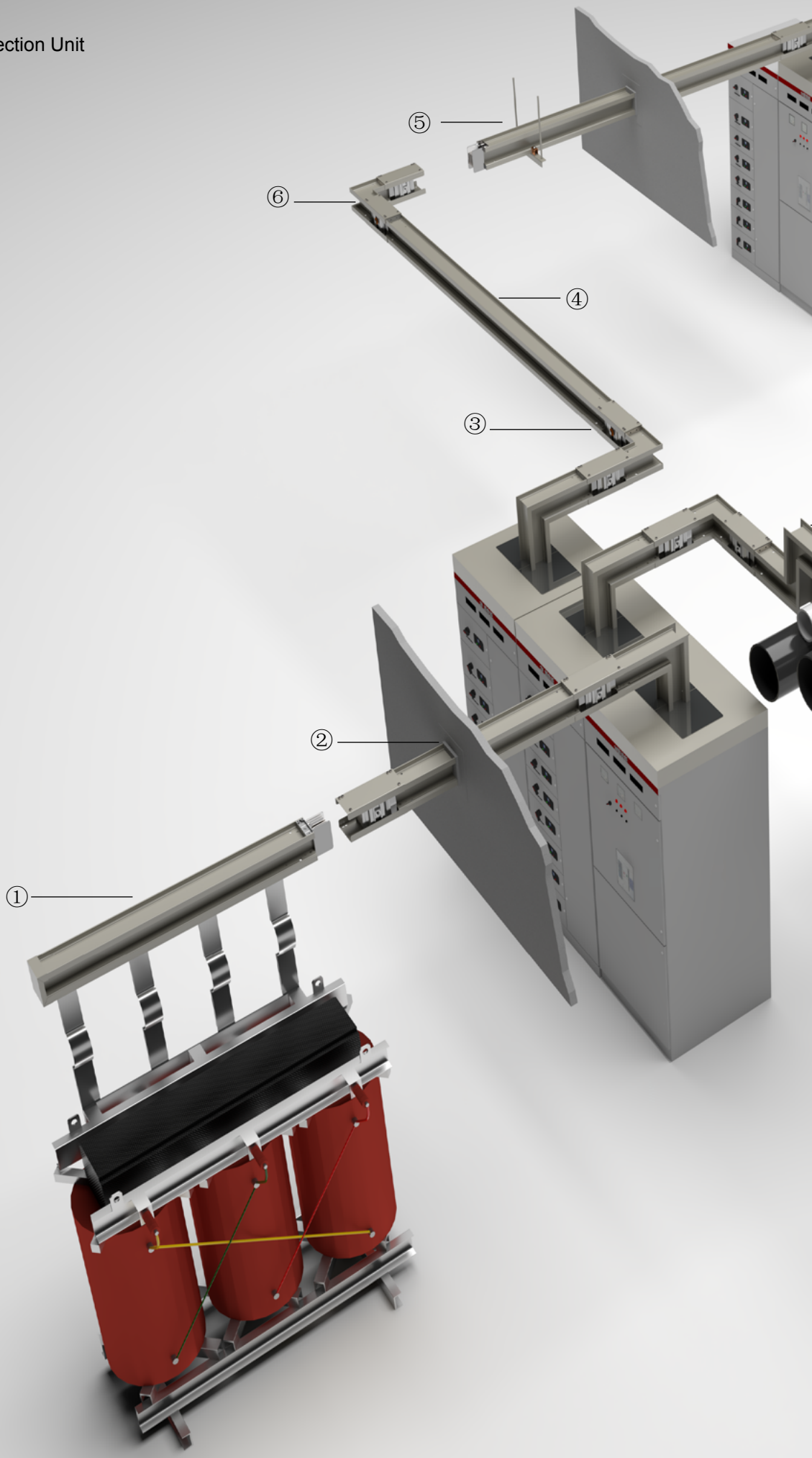

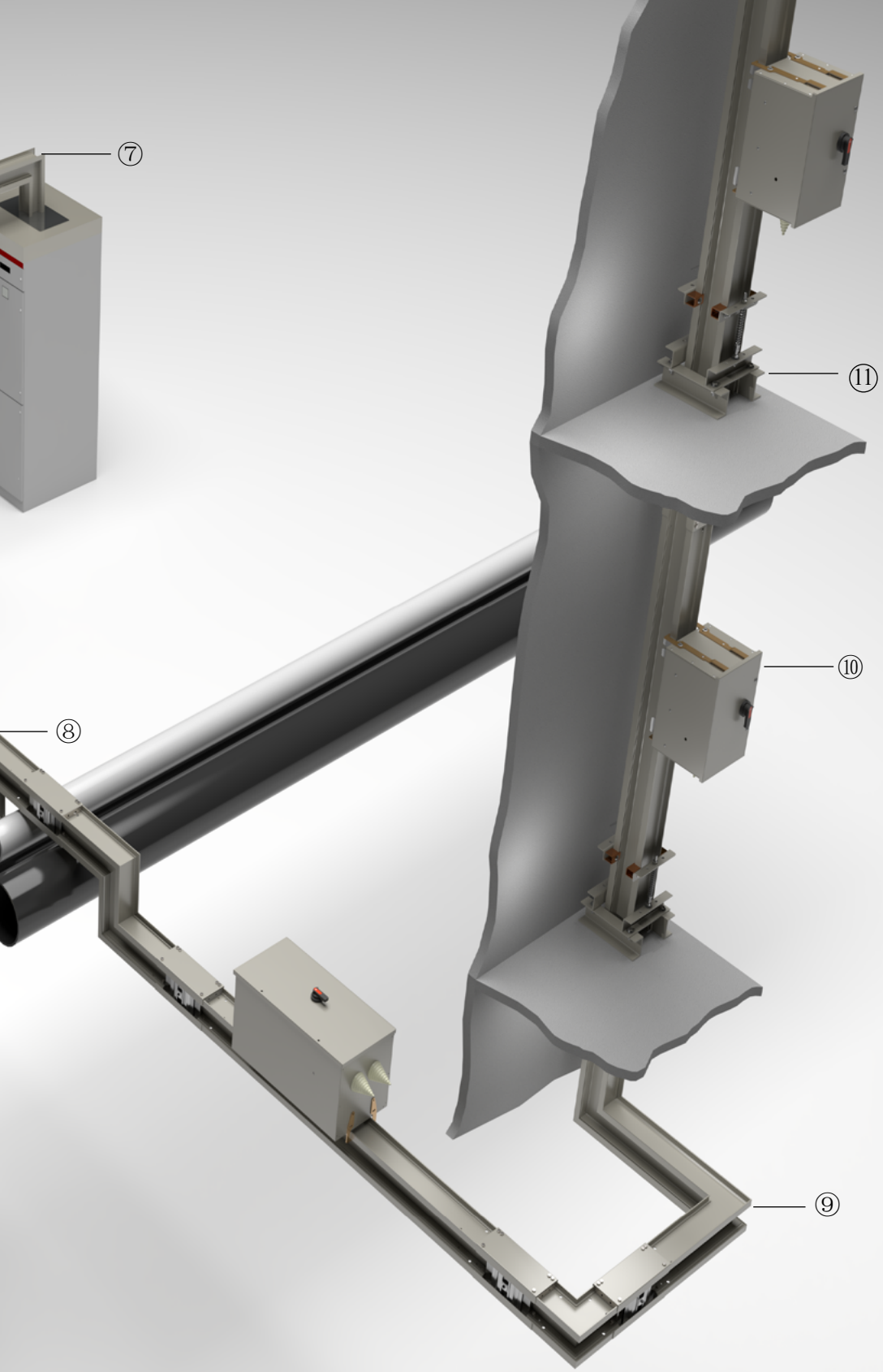

7. Edgewise Elbow
8. Edgewise Offset
9. Nonstandard Elbow
10. Plug-in Box
11. Spring Hanger

Product Features

Make the most of your energy

Superior & Reliable Insulation

- Both polyester film insulation and epoxy insulation (Class B) are available with exceptional electrical performance and superior mechanical strength.
- Environmental friendly materials are applied with certification by reputed international laboratory. The busway system is halogen-free with no toxicity emission in case of fire.

Predictive Temperature Rise Indicator

- Joint insulator with a convex-concave groove edge provides an increased creepage distance.
- Color-coded-temperature indicator applied at busway joint is to give an early warning when high temperature occurs at the joint.

Unique structure design

- The unique “serrated surface” design of extruded >3mm thickness aluminum housing greatly improves the heat dissipation for the whole busway system.
- By the design of two-piece housing, Tai Sin Low Voltage Busbar Trunking System provides more reliable IP protection for the field application than traditional design, including IP54, IP65, IP66.

99.9% Purity Copper Conductor

High-speed sawing for a high sawing accuracy and smooth cut to reduce temperature rise at the busway joint.

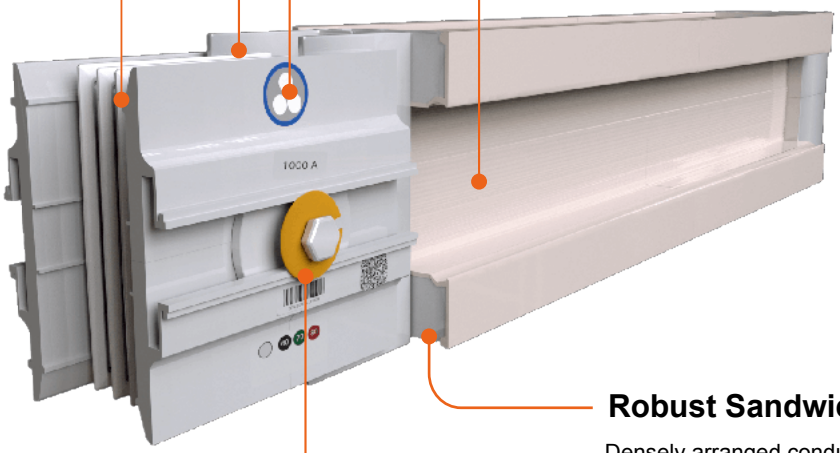

Robust Sandwich Structure

Densely arranged conductors in the housing to achieve superior heat dissipation, lower temperature rise and eliminate the “chimney effect”.

Unique Joint Design

- Single bolt joint design to shorten the time of connection by 50% compared to the traditional design.
- Double-headed "break off" joint bolt is applied to tighten the busway with just a common 16mm socket wrench. Belleville spring washers are adopted to ensure pressure evenly applied across the joint.The tighting and re-tightening torque value for the double-headed joint bolt is 70~80N.

Other Features:

- **Novel Conductor Structure**
- **Compact Design**
- **Unique error-proof device (Bridge Type Joint)**
- **Plug outlet and busway plug**

For more details: https://www.taisin.com.sg/our-products/busbar-trunking-system/

Add-On Feature (Optional)

Busbar Trunking System - Remote conditional monitoring

For an electrical system, one of the typical concerns is connection and abnormal heating may occur at location of loose or improper connection due to an increase in the electrical resistance. The overheating further increases the electrical resistance and can lead to a burnout or even a fire. The burning out of an electrical system is a threat to plant safety and can lead to an unplanned shutdown of plant operations. To eliminate such risks and avoid the huge costs of lost production, it is vital to quickly detect and immediately respond to any indication of overheating in a power system (a.k.a Predictive Mornitoring System).

Continuously monitor busbar health, run time, and detect unexpected busbar failures such as early bearing failure, unbalance, misalignment, etc

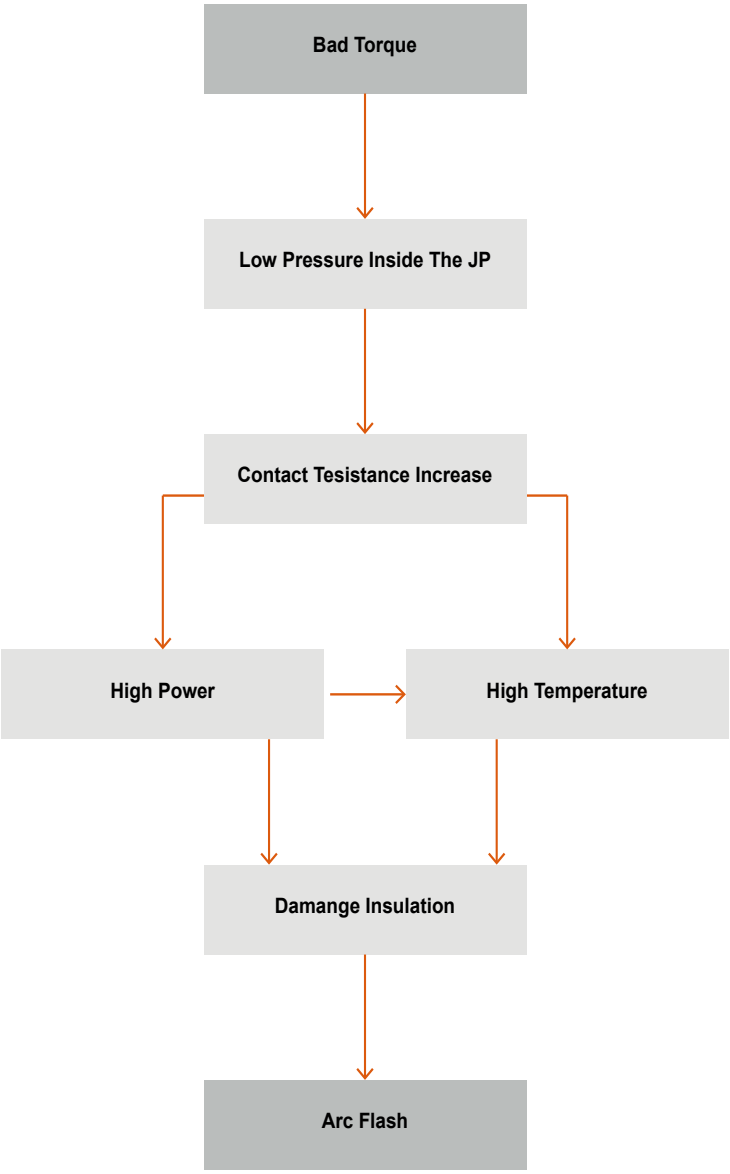

THERMAL AVALANCHE EFFECT

Your Challanges

In order to prevent overheating at any of the electrical connections, the connections should be inspected on a regular basis. However, there are a few obtacles:

- **Visual inspection:** Might not be feasible or accurate because the connections are often covered, and are often in difficult to access locations
- **Thermal imaging cameras can be difficult due to complicated structure**: In some instances, electrical distribution connections can follow complicated paths through plant structures and buildings which may may result in blind spots that might not be readily imaged using thermal imaging cameras.
- **Thermocouple thermometers are not suitable due to electromagnetic noise:** As electrical systems are surrounded by strong electric fields, conventional electric sensors such as thermocouple thermometers are not suitable for this purpose.

Add-On Feature (Optional)

Busbar Trunking System - Remote conditional monitoring

Our Solutions

- We provide a temperature sensor that is not affected by electromagnetic noise.
- By quickly detecting overheating and pinpointing the location of a hotspot remotely, our thermal sensor ensures that any problem can be responded to immediately, before it leads to a costly and expensive plant shutdown. Our thermal sensor can be installed directly on a bus bar and on the surface of a busbar or cover.

Benefits

Provide the temperature report quickly and accurately of any joints at any time.

- Monitor busbar and alert maintenance teams when aging and over-used equipment are on the verge of failure resulting in flash over.
- Improve human safety, reliability, quality of service, and ensure that equipment keeps running.
- Pinpoint exact location of the busbar when temperature spikes flag pending components failures.
- Accurate temperature monitoring under a strong electric field.
- Quick detection with abnormal location to prevent burnout.
- Condition based inspection work by temperature changes.

TEMPERATURE TRENDING

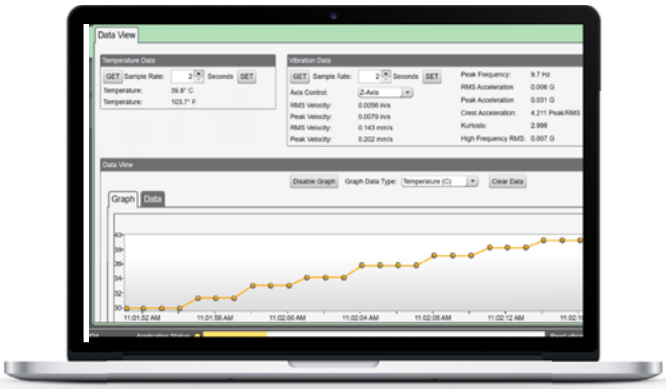

VIBRATION TRENDING

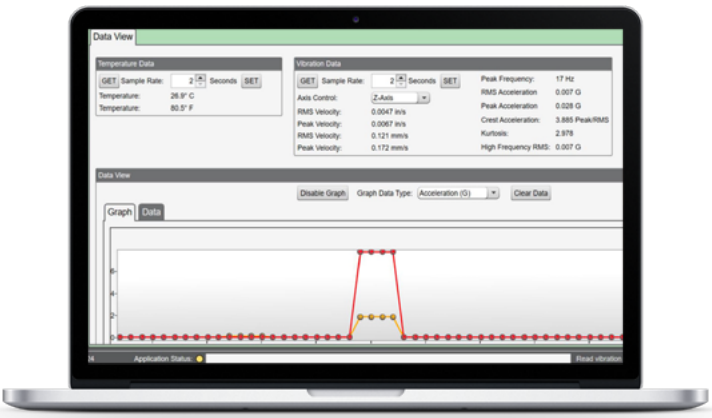

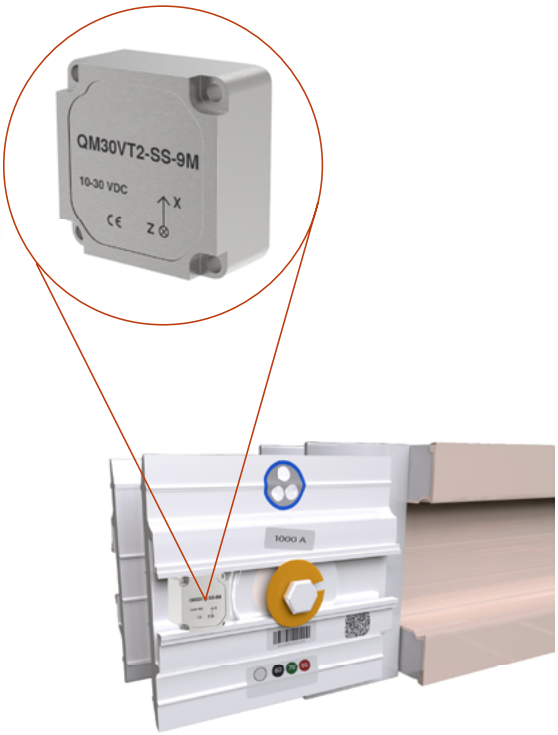

Why are we a suitable partner as a power distribution supplier?

While being mindful of the technological development in the world, we ensure the availability of field experts with extensive knowledge on national construction standards, local provisioning, energy needs and business expectations. Our products are compliant to local as well as international standards. Tai Sin has a competent sales force across Southeast Asia and our local team will provide you with full assistance from project management support to logistics arrangement for a seamless delivery of your project. Our value propositions to you are as follows:

Regional Testing and Assembly Facility in Singapore

We have the capability to verify Busbar Trunking specifications according to IEC standard and other International standards upon request in Singapore. In addition, we are able to conduct Factory Acceptance Tests (FAT) for the final Busbar Trunking System in our Singapore facility.

We are able to support any urgent product customisation requests such as modifications, fault ratification and repair to help you achieve fast project turnaround time.

Southeast Asian (SEA) Expertise

We have achieved essential field experience by our successful participation in various market segments, including Airports, Wafer Fabrication Plants, Hospitals, Hospitalities and Data Centres. We are proficient in providing solutions far beyond busbar trunking systems through our valuable experience in office buildings. We support our projects with a Pan SEA approach based on best practices, to complement the evolving Data Center landscape.

Spare parts - Get the Right Parts At The Right Time

Don't run the risk of extended electrical downtime and take advantage of our local assembly facility for all your spare part needs.

Audit – Reduce risk And Improve Reliability

Our engineers help assess your sites, identify safety and efficient issues of your critical installations. We will help reduce risk and improve reliability for your electrical distribution needs and optimize your energy usage while pointing the way to your digital journey.

Maintenance – Ensure Equipment Peak Performance

Helping you keep mission-critical infrastructure operating at maximum efficiency and optimal performance is our main goal. Our support services provide flexibility for all aspects of your electrical distribution needs.

Training – Get Tailored Training Solutions

Our technical training solutions are capable of enhancing the technical competencies of your team in electrical safety and distribution.

Expertise & Skills Guide

We have acquired valuable experience and expertise in designing busbar trunking systems, materials, standards, and technology. We are confident in our offerings and evolving from being a mere product supplier to being a responsive provider of solutions and services.

Tai Sin Group is proficient in providing products and services including the support of a dedicated project team to help in the layout drafting, installation, testing and commissioning as well as provision of competent trainers for any operation and maintenance needs. The group has competent expertise in the power distribution industry across Southeast Asia. As energy is the foundation of our developments, we will continue to evolve and offer products with the latest design complying with the most current standards for our Cables, Branch Cables and Busbar Trunking Systems.

Electrical Specification

Aluminum alloy housing with internal separate ground bar (aluminum or copper) of LV Series Busbar provides an extremely low impedance ground path with small resistance for both copper and aluminum systems. Plug-in outlet grounding is supplied with tin-plated copper tabs bolted to the plug-in box housing for superior continuity through standard bus plug ground stabs.

Grounding resistance of LV Busbar Trunking System (temperature=20℃):

Copper		Aluminum	
Current	Internal 50% ground bus resistance(μΩ/m)	Current	Internal 50% ground bus resistance(μΩ/m)
400A	197.4	250A	291.7
630A	148.1	400A	233.3
800A	107.7	630A	179.5
1000A	91.1	800A	147.7
1250A	66.6	1000A	112.2
1600A	47.4	1250A	83.9
2000A	37.3	1350A	83.9
2500A	28.3	1600A	61.7
3200A	24.9	2000A	56.1
4000A	18.6	2500A	42.0
5000A	14.2	3200A	30.9
		4000A	25.5

Grounding capacity of LV Busbar Trunking System:

Copper				Aluminum			
SN	Rating	Deck	Internal Ground (mm^2)	SN	Rating	Deck	Internal Ground (mm^2)
1	400	1	90	1	250	1	120
2	630	1	120	2	400	1	150
3	800	1	150	3	630	1	195
4	1000	1	195	4	800	1	240
5	1250	1	270	5	1000	1	315
6	1600	1	360	6	1250	1	420
7	2000	1	480	7	1350	1	420
8	2500	1	630	8	1600	1	570
9	3200	2	720	9	2000	2	630
10	4000	2	960	10	2500	2	840
11	5000	2	1260	11	3200	2	1140
				12	4000	2	1380

Short-circuit ratings

The ratings shown below are UL recognized RMS symmetrical amps. Tests were run as per UL 857 standards.

The system can comply with IEC61439 for short circuit withstand test at 1 Second.

Rated short circuit withstand current

Copper (Current)	(RMS Symmetrical, KA) (1 Sec.)
400A	30
630A	30
800A	50
1000A	50
1250A	50
1600A	65
2000A	65
2500A	65
3200A	120
4000A	120
5000A	120

Rated short circuit withstand current

Aluminum (Current)	(RMS Symmetrical, KA) (1 Sec.)
250A	30
400A	30
630A	30
800A	30
1000A	50
1250A	50
1350A	50
1600A	65
2000A	80
2500A	80
3200A	120
4000A	120

Resistance, reactance, impedance and voltage drop

Copper conductor:Frequency-50Hz

Current	Resistance R_{20} (mΩ/m)	Resistance $R_{Full\ Load}$ (mΩ/m)	Resistance X (mΩ/m)	Voltage Drop per Meter at Full Load Condition (V/m)				
				Power factor cosφ				
				0.6	0.7	0.8	0.9	1
400	0.102	0.126	0.041	0.075	0.081	0.087	0.091	0.087
630	0.090	0.112	0.037	0.106	0.114	0.122	0.128	0.122
800	0.066	0.077	0.032	0.099	0.106	0.112	0.115	0.107
1000	0.055	0.071	0.026	0.110	0.118	0.125	0.130	0.123
1250	0.040	0.050	0.019	0.098	0.105	0.111	0.115	0.108
1600	0.029	0.034	0.015	0.090	0.096	0.100	0.103	0.094
2000	0.023	0.028	0.012	0.091	0.098	0.104	0.105	0.097
2500	0.017	0.022	0.011	0.095	0.101	0.105	0.106	0.095
3200	0.015	0.024	0.006	0.106	0.117	0.126	0.134	0.133
4000	0.011	0.015	0.003	0.079	0.088	0.096	0.101	0.104
5000	0.009	0.011	0.002	0.071	0.079	0.087	0.093	0.095

In the table above, the load distribution coefficient k=1. In specific project, the k value varies with the branch number of the busbar trunking system.

Aluminium conductor:Frequency-50Hz

Current	Resistance R_{20} (mΩ/m)	Resistance $R_{Full\ Load}$ (mΩ/m)	Resistance X (mΩ/m)	Voltage Drop per Meter at Full Load Condition (V/m)				
				Power factor cosφ				
				0.6	0.7	0.8	0.9	1
250	0.151	0.185	0.073	0.073	0.079	0.083	0.086	0.080
400	0.121	0.155	0.061	0.098	0.105	0.111	0.115	0.107
630	0.093	0.120	0.052	0.124	0.132	0.139	0.143	0.131
800	0.077	0.105	0.027	0.117	0.129	0.139	0.147	0.145
1000	0.058	0.072	0.046	0.139	0.144	0.148	0.147	0.125
1250	0.044	0.061	0.012	0.100	0.111	0.121	0.130	0.132
1350	0.040	0.055	0.013	0.101	0.112	0.121	0.129	0.129
1600	0.032	0.046	0.015	0.110	0.119	0.127	0.133	0.127
2000	0.029	0.041	0.019	0.138	0.146	0.153	0.157	0.142
2500	0.022	0.029	0.010	0.110	0.119	0.126	0.132	0.126
3200	0.016	0.023	0.007	0.108	0.117	0.125	0.132	0.127
4000	0.013	0.015	0.005	0.090	0.097	0.104	0.109	0.104

In the table above, the load distribution coefficient k=1. In specific project, the k value varies with the branch number of the busbar trunking system.

Resistance, reactance, impedance and voltage drop

Copper conductor:Frequency-60Hz

Current	Resistance R_{20} (mΩ/m)	Resistance $R_{Full\ Load}$ (mΩ/m)	Resistance X (mΩ/m)	Voltage Drop per Meter at Full Load Condition (V/m)				
				Power factor cosφ				
				0.6	0.7	0.8	0.9	1
400	0.102	0.126	0.049	0.080	0.085	0.090	0.093	0.087
630	0.090	0.112	0.045	0.112	0.120	0.127	0.131	0.122
800	0.066	0.077	0.039	0.107	0.113	0.117	0.119	0.107
1000	0.055	0.071	0.031	0.117	0.125	0.131	0.134	0.123
1250	0.040	0.050	0.023	0.105	0.111	0.116	0.119	0.108
1600	0.029	0.034	0.018	0.097	0.102	0.105	0.107	0.094
2000	0.023	0.028	0.014	0.098	0.104	0.108	0.109	0.097
2500	0.017	0.022	0.013	0.103	0.108	0.111	0.111	0.095
3200	0.015	0.024	0.007	0.112	0.122	0.130	0.137	0.133
4000	0.010	0.013	0.007	0.093	0.098	0.101	0.102	0.090
5000	0.008	0.010	0.004	0.080	0.085	0.090	0.093	0.087

In the table above, the load distribution coefficient k=1. In specific project, the k value varies with the branch number of the busbar trunking system.

Aluminium conductor:Frequency-60Hz

Current	Resistance R_{20} (mΩ/m)	Resistance $R_{Full\ Load}$ (mΩ/m)	Resistance X (mΩ/m)	Voltage Drop per Meter at Full Load Condition (V/m)				
				Power factor cosφ				
				0.6	0.7	0.8	0.9	1
250	0.151	0.185	0.088	0.079	0.083	0.087	0.089	0.080
400	0.121	0.155	0.073	0.105	0.111	0.116	0.119	0.107
630	0.093	0.120	0.063	0.133	0.140	0.146	0.148	0.131
800	0.077	0.105	0.033	0.123	0.134	0.143	0.151	0.145
1000	0.058	0.072	0.055	0.152	0.156	0.157	0.154	0.125
1250	0.044	0.061	0.014	0.104	0.115	0.124	0.133	0.132
1350	0.040	0.055	0.015	0.105	0.115	0.124	0.131	0.129
1600	0.032	0.046	0.018	0.117	0.125	0.132	0.137	0.127
2000	0.029	0.041	0.023	0.149	0.156	0.161	0.162	0.142
2500	0.022	0.029	0.012	0.117	0.125	0.132	0.136	0.126
3200	0.016	0.023	0.008	0.114	0.123	0.130	0.135	0.127
4000	0.013	0.015	0.006	0.096	0.103	0.108	0.112	0.104

In the table above, the load distribution coefficient k=1. In specific project, the k value varies with the branch number of the busbar trunking system.

Physical Data

Straight length

Feeder, the straight length without outlets, can be installed either horizontally or vertically.

The standard length is either 3000mm or 4000mm.

The minimum length is 460mm.

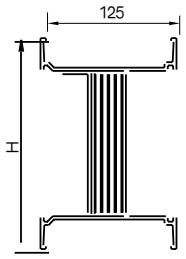

Single-deck

LVA-02 ~ 16

LVC-04 ~ 25

01

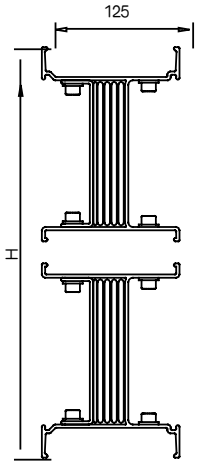

Dual-deck

LVA-20～40

LVC-32～50

02

Copper conductor

Current	Dimension		Weight per meter (kg/m)		Fig.
	Width (W)	Height (H)	4wire 100%N	5wire 100%N, 50%PE	
400	125	103	11.3	12.4	01
630	125	103	12.5	13.6	
800	125	118	15.4	17.1	
1000	125	128	18.1	19.9	
1250	125	153	22.8	25.4	
1600	125	188	30.7	34.3	
2000	125	223	38.2	42.8	
2500	125	273	52.8	59.4	
3200	125	352	59.5	66.5	02
4000	125	432	76.9	86.3	
5000	125	532	97.3	108.9	

Aluminium conductor

Current	Dimension		Weight per meter (kg/m)		Fig.
	Width (W)	Height (H)	4wire 100%N	5wire 100%N, 50%PE	
250	125	103	6.8	7.2	01
400	125	113	7.5	7.9	
630	125	128	8.8	9.3	
800	125	143	9.8	10.4	
1000	125	168	11.8	12.7	
1250	125	203	14.6	15.7	
1350	125	203	14.6	15.7	
1600	125	253	18.3	19.8	
2000	125	322	22.6	24.3	02
2500	125	392	28.7	31	
3200	125	492	36.2	39.4	
4000	125	572	44.7	48.9	

Fittings

Plug-in straight length

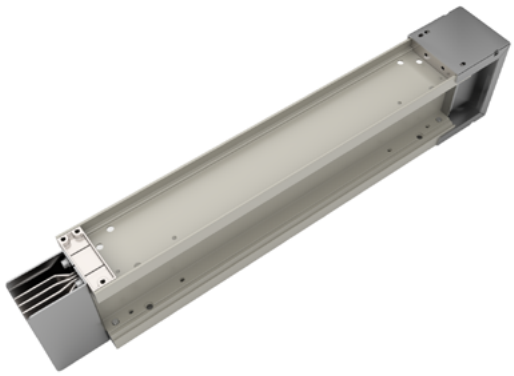

The plug-in busbar has a flexible design with optional plug outlets on both sides. A maximum of 5 outlets can be fixed on each side of 3m standard length. The customer may reserve plug outlets for extension in the future when changes occur in terms of the equipment load or busway run. Both base plate and socket cover are set for each plug outlet. Base plate helps to prevent fingers from contacting live conductors (IP2X) by accident, on which the phase sequences of conductors are identified. Socket cover prevents the conductive contacting surface from being contaminated. A pad may be used to keep off dust or moisture.

Standard length is 3000mm or 4000mm. The minimum length is 720mm. The minimum length of L1 (distance from the center of plug outlet to standard end) is 360mm. The minimum length of L2 (distance between the centers of two adjacent plug outlets) is 570mm.

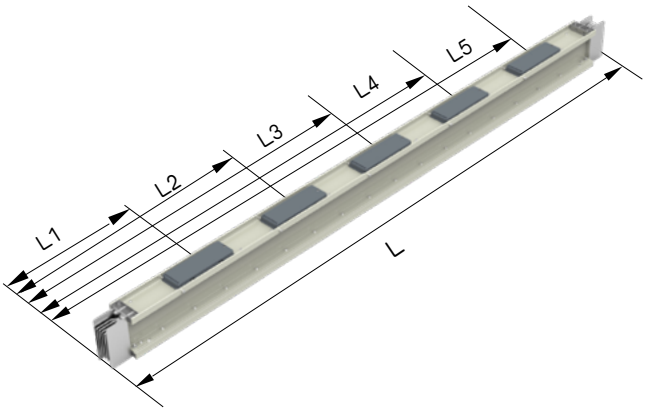

L1=0.36

L2=0.93

L3=1.50

L4=2.07

L5=2.64

Standard length:

LVC: L=1、2、3m　　LVA: L=1、2、3m

Optional length:

LVC: L=0.72 ～ 4m　　LVA: L=0.72 ～ 4m

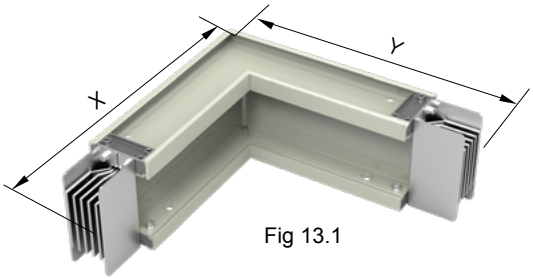

Fig 13.1

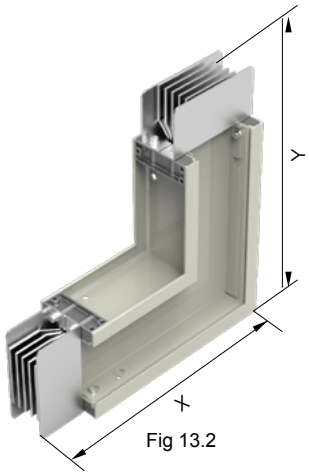

Fig 13.2

L flatwise elbow - Fig 13.1

Rated current (A)	Copper busway size (mm)				Aluminium busway size (mm)			
	Minimum		Standard		Minimum		Standard	
	X	Y	X	Y	X	Y	X	Y
250	/	/	/	/	363	363	400	400
400	363	363	400	400	363	363	400	400
630	363	363	400	400	363	363	400	400
800	363	363	400	400	363	363	400	400
1000	363	363	400	400	363	363	400	400
1250	363	363	400	400	363	363	400	400
1350	/	/	/	/	363	363	400	400
1600	363	363	400	400	363	363	400	400
2000	363	363	400	400	363	363	400	400
2500	363	363	400	400	363	363	400	400
3200	363	363	400	400	363	363	400	400
4000	363	363	400	400	363	363	400	400
5000	363	363	400	400				

L edgewise elbow - Fig 13.2

Rated current (A)	Copper busway size (mm)				Aluminium busway size (mm)			
	Minimum		Standard		Minimum		Standard	
	X	Y	X	Y	X	Y	X	Y
250	/	/	/	/	341	341	450	450
400	341	341	400	400	351	351	450	450
630	341	341	400	400	366	366	450	450
800	351	351	400	400	381	381	450	450
1000	366	366	400	400	406	406	450	450
1250	391	391	400	400	441	441	500	500
1350	/	/	/	/	441	441	500	500
1600	421	421	550	550	491	491	500	500
2000	461	461	550	550	560	560	850	850
2500	511	511	550	550	630	630	850	850
3200	590	590	800	800	730	730	850	850
4000	670	670	800	800	810	810	850	850
5000	770	770	800	800				

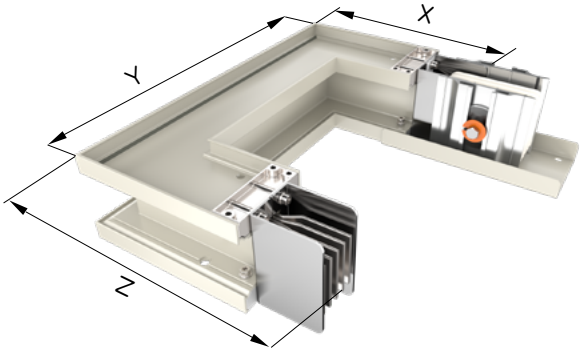

Fig 14.1

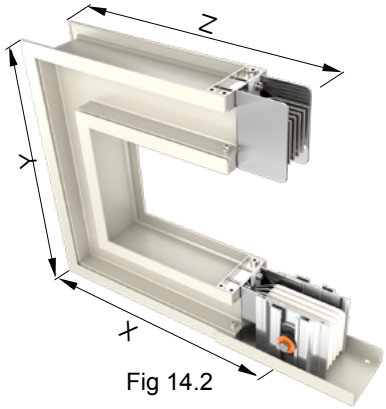

Fig 14.2

Flatwise U - Fig 14.1

Rated current (A)	Copper busway size (mm)						Aluminium busway size (mm)					
	Minimum			Standard			Minimum			Standard		
	X	Y	Z	X	Y	Z	X	Y	Z	X	Y	Z
250	/	/	/	/	/	/	363	370	363	400	400	400
400	363	370	363	400	400	400	363	370	363	400	400	400
630	363	370	363	400	400	400	363	370	363	400	400	400
800	363	370	363	400	400	400	363	370	363	400	400	400
1000	363	370	363	400	400	400	363	370	363	400	400	400
1250	363	370	363	400	400	400	363	370	363	400	400	400
1350	/	/	/	/	/	/	363	370	363	400	400	400
1600	363	370	363	400	400	400	363	370	363	400	400	400
2000	363	370	363	400	400	400	363	370	363	400	400	400
2500	363	370	363	400	400	400	363	370	363	400	400	400
3200	363	370	363	400	400	400	363	370	363	400	400	400
4000	363	370	363	400	400	400	363	370	363	400	400	400
5000	363	370	363	400	400	400						

Edgewise U - Fig 14.2

Rated current (A)	Copper busway size (mm)						Aluminium busway size (mm)					
	Minimum			Standard			Minimum			Standard		
	X	Y	Z	X	Y	Z	X	Y	Z	X	Y	Z
250	/	/	/	/	/	/	341	326	341	450	500	450
400	341	326	341	400	450	400	351	346	351	450	500	450
630	341	326	341	400	450	400	366	376	366	450	500	450
800	351	346	351	400	450	400	381	406	381	450	500	450
1000	366	376	366	400	450	400	406	456	406	450	500	450
1250	391	426	391	400	450	400	441	526	441	500	650	500
1350	/	/	/	/	/	/	441	526	441	500	650	500
1600	421	486	421	550	700	550	491	626	491	500	650	500
2000	461	566	461	550	700	550	560	764	560	850	650	850
2500	511	666	511	550	700	550	630	904	630	850	1300	850
3200	590	824	590	800	1200	800	730	1104	730	850	1300	850
4000	670	984	670	800	1200	800	810	1264	810	850	1300	850
5000	770	1184	770	800	1200	800						

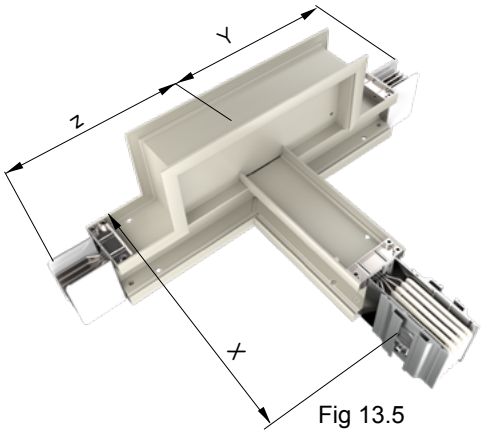

Fig 13.5

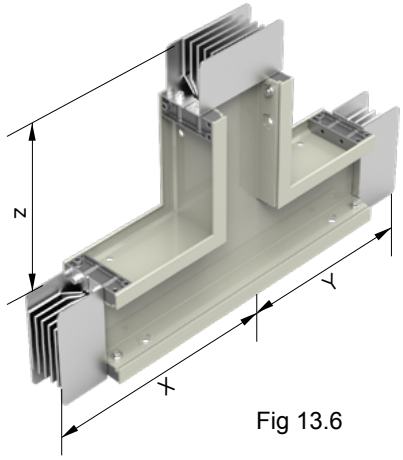

Fig 13.6

Flatwise Tee - Fig 13.5

Rated current (A)	Copper busway size (mm)						Aluminium busway size (mm)					
	Minimum			Standard			Minimum			Standard		
	X	Y	Z	X	Y	Z	X	Y	Z	X	Y	Z
250	/	/	/	/	/	/	341	290	290	450	350	350
400	341	290	290	400	350	350	351	295	295	450	350	350
630	341	290	290	400	350	350	366	302	302	450	350	350
800	351	295	295	400	350	350	381	310	310	450	350	350
1000	366	302	302	400	350	350	406	322	322	450	350	350
1250	391	315	315	400	350	350	441	340	340	500	400	400
1350	/	/	/	/	/	/	441	340	340	500	400	400
1600	421	330	330	550	400	400	491	365	365	500	400	400
2000	461	350	350	550	400	400	560	399	399	850	550	550
2500	511	375	375	550	400	400	630	434	434	850	550	550
3200	590	414	414	800	550	550	730	484	484	850	550	550
4000	670	454	454	800	550	550	810	524	524	850	550	550
5000	770	504	504	800	550	550						

Edgewise Tee - Fig 13.6

Rated current (A)	Copper busway size (mm)						Aluminium busway size (mm)					
	Minimum			Standard			Minimum			Standard		
	X	Y	Z	X	Y	Z	X	Y	Z	X	Y	Z
250	/	/	/	/	/	/	363	411	411	400	500	500
400	363	411	411	400	500	500	363	411	411	400	500	500
630	363	411	411	400	500	500	363	426	426	400	500	500
800	363	426	426	400	500	500	363	436	436	400	500	500
1000	363	436	436	400	500	500	363	461	461	400	500	500
1250	363	461	461	400	500	500	363	496	496	400	600	600
1350	/	/	/	/	/	/	363	496	496	400	600	600
1600	363	496	496	400	600	600	363	531	531	400	600	600
2000	363	531	531	400	600	600	363	581	581	400	600	600
2500	363	581	581	400	600	600	363	660	660	400	900	900
3200	363	660	660	400	900	900	363	740	740	400	900	900
4000	363	740	740	400	900	900	363	840	840	400	900	900
5000	363	840	840	400	900	900						

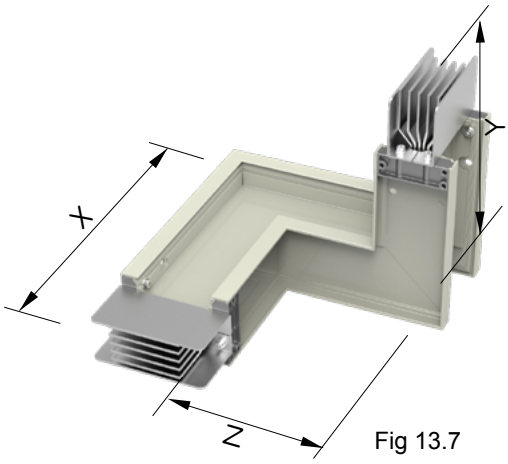

Fig 13.7

Combination Elbow - Fig 13.7

Rated current (A)	Copper busway size (mm)						Aluminium busway size (mm)					
	Minimum			Standard			Minimum			Standard		
	X	Y	Z	X	Y	Z	X	Y	Z	X	Y	Z
250	/	/	/	/	/	/	341	348	363	450	450	400
400	341	348	363	400	400	400	351	358	363	450	450	400
630	341	348	363	400	400	400	366	373	363	450	450	400
800	351	358	363	400	400	400	381	388	363	450	450	400
1000	366	373	363	400	400	400	406	413	363	450	450	400
1250	391	398	363	400	400	400	441	448	363	500	500	400
1350	/	/	/	/	/	/	441	448	363	500	500	400
1600	421	428	363	550	550	400	491	498	363	500	500	400
2000	461	468	363	550	550	400	560	567	363	850	850	400
2500	511	518	363	550	550	400	630	637	363	850	850	400
3200	590	597	363	800	800	400	730	737	363	850	850	400
4000	670	677	363	800	800	400	810	817	363	850	850	400
5000	770	777	363	800	800	400						

Flanged end

Standard length: L=0.56m

Nonstandard length: L=0.56 ～ 2.00m

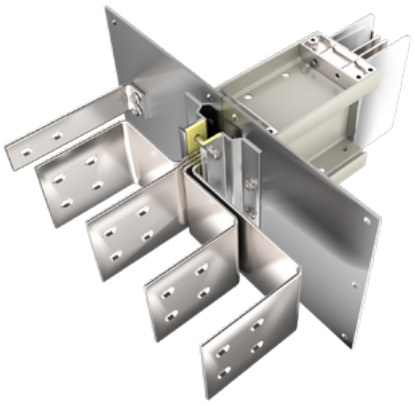

3P+100%N+50% integral housing as PE

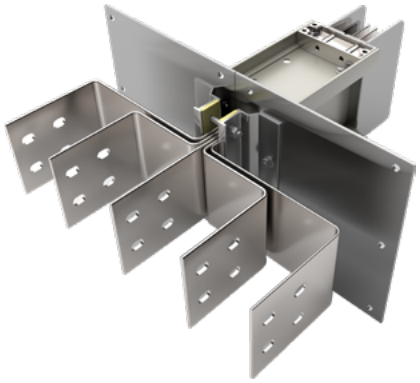

3P+100%N+50% internal bar as PE

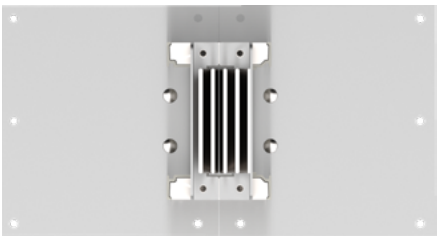

Top view

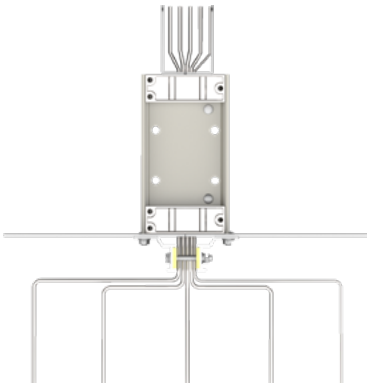

Section view

Section view

Flanged end and end tap box can be used in connection with any type of switchgear cabinets and transformers. Flanged end busbar spacing can be customized on specific application.

Note:

All the dimensions provided are for standard products. Please contact our engineers for customized dimensions.

Flanged end cut out and drilling pattern

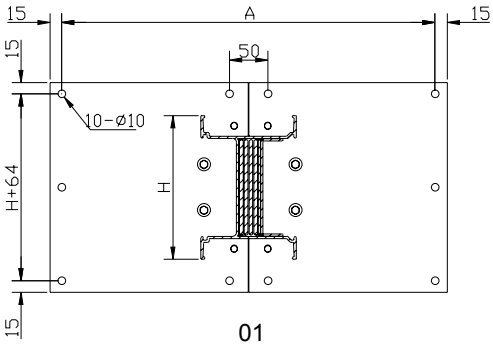

01

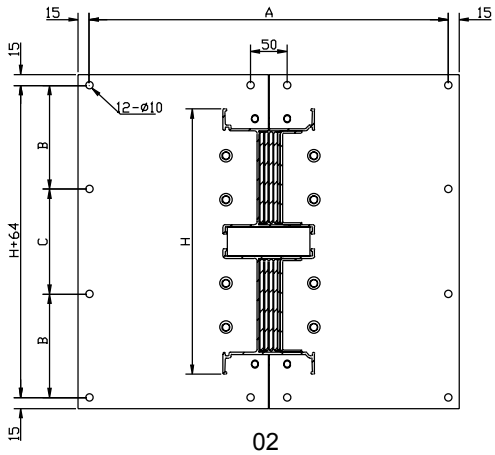

02

LVC

Rated Current (A)	3L+N+PE Size (mm)				3L+N Size (mm)			Fig
	H	A	B	C	A	B	C	
400	103	490			370			01
630	103	490			370			
800	118	490			370			
1000	128	490			370			
1250	153	490			370			
1350								
1600	188	490			370			
2000	223	490			370			
2500	273	490			370			
3200	352	490	140	136	370	140	136	02
4000	432	490	165	166	370	165	166	
5000	532	490	200	196	370	200	196	

LVA

Rated Current (A)	3L+N+PE Size (mm)				3L+N Size (mm)			Fig
	H	A	B	C	A	B	C	
250	103	490			370			01
400	113	490			370			
630	128	490			370			
800	143	490			370			
1000	168	490			370			
1250	203	490			370			
1350	203	490			370			
1600	253	490			370			
2000	322	490	130	126	370	130	126	
2500	392	490	150	156	370	150	156	02
3200	492	490	185	186	370	185	186	
4000	572	490	210	216	370	210	216	

Flanged end bar hole pattern

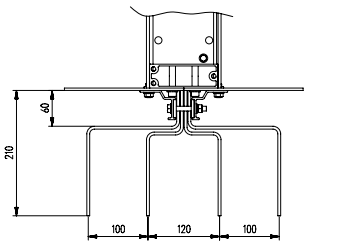

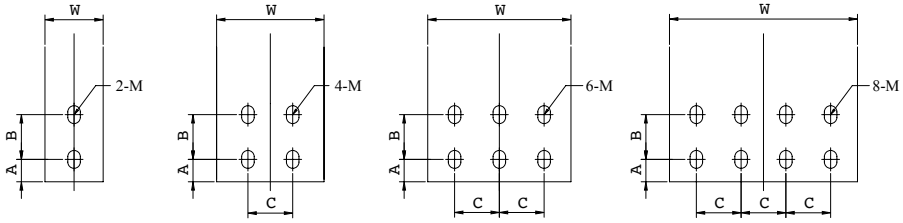

A B C D

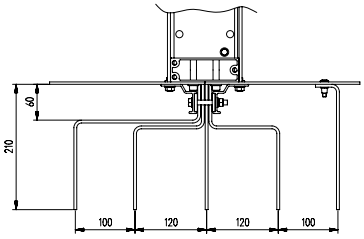

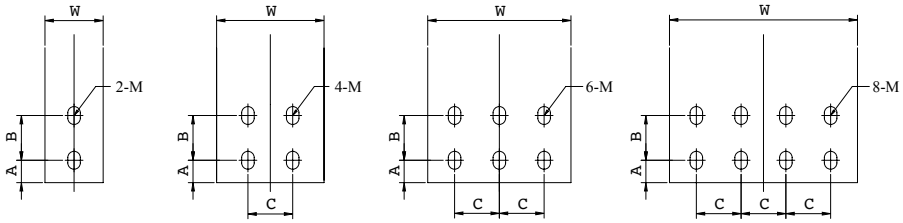

A B C D

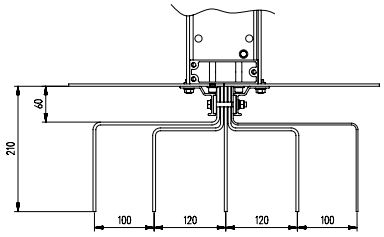

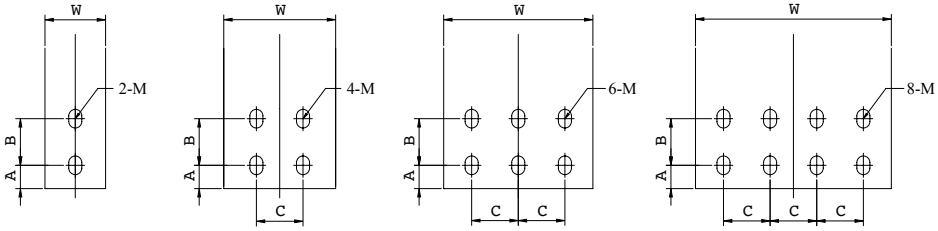

AB CD

Copper conductor

Rated Current	A	B	C	M	Type
400	25	50		Φ12	A
630	25	50		Φ14×20	A
800	25	50		Φ14×20	A
1000	25	50		Φ14×20	A
1250	25	50	50	Φ14×20	B
1350					
1600	25	50	50	Φ14×20	B
2000	25	50	50	Φ14×20	C
2500	25	50	50	Φ14×20	D
3200	25	50	50	Φ14×20	B
4000	25	50	50	Φ14×20	C
5000	25	50	50	Φ14×20	D

Aluminum conductor

Rated Current	A	B	C	M	Type
250	25	50		Φ14×20	A
400	25	50		Φ14×20	A
630	25	50		Φ14×20	A
800	25	50		Φ14×20	A
1000	25	50	50	Φ14×20	B
1250	25	50	50	Φ14×20	C
1350	25	50	50	Φ14×20	C
1600	25	50	50	Φ14×20	C
2000	25	50	50	Φ14×20	D
2500	25	50	50	Φ14×20	C
3200	25	50	50	Φ14×20	C
4000	25	50	50	Φ14×20	D

Expansion joint

Expansion length is the transition section compensating for thermal expansion, one is normally set for each 60m in linear distance.

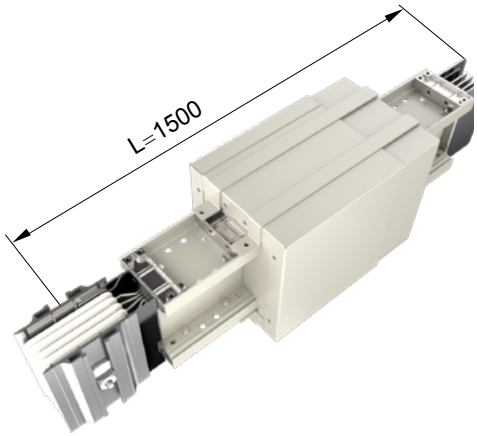

Reducer

This reducer section is used for reducing busbar size to the final load, it provides users with more economic power transmission and distribution method.

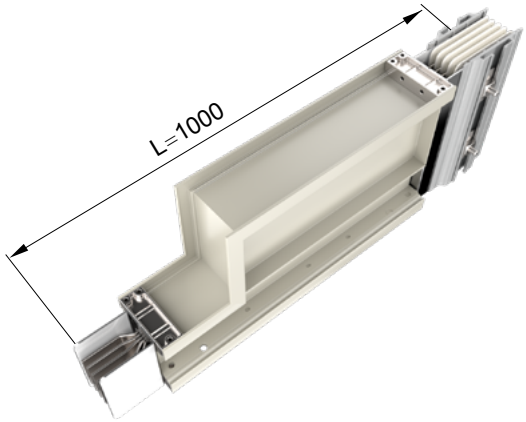

Transposition joint

Transposition section is the transition parts used for changing phase sequence of the busbar; its minimum size is 1500mm. The phase sequence of both sides can be customized by the customer.

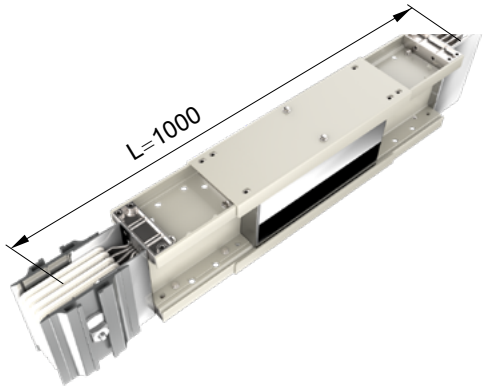

Terminal cover

Protection for the busway terminal to avoid be damaged.

Bus plug

LV bus plug is adopted to apply electrical power directly to the load from the busway system. Fully considering customer's requirements, LV bus plug offers the options of circuit breaker or fuse.

Bus plug with circuit breaker

• Circuit breaker protection can be available with a current range from 16A-1000A.

• Load protection in the plug can be 3-Pole or 4-Pole circuit breakers, including accessories of breakers such as rotary handles, shunt release, thermal magnetic release and leakage-current protection module.

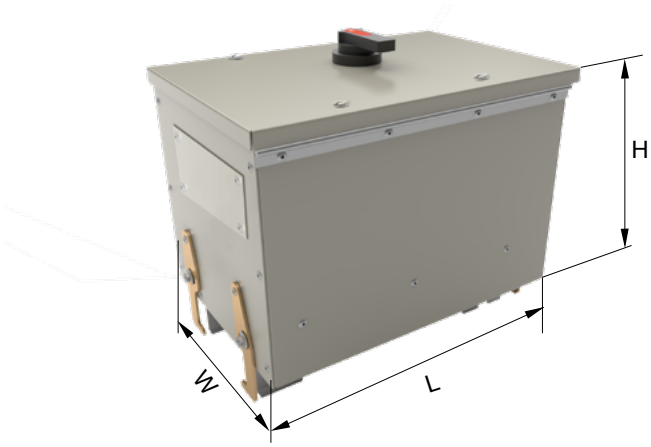

Plug with fuse

• Plug-boxes with fuses can be produced according to customer specifications.

• Unique fail-safe base pins

the plug is equipped with a positioning device that prevents incorrect phase installations.

plug Pins: All pins are silver-plated to improve the electrical conductivity.

Protection class up to IP54 with IEC 60529

Plug-in box Dimensions (L×W×H)mm

• For non-standard dimension, please contact the manufacturer.

Current ratings (A)	Plug-in box Dimensions		
	L(mm) Length	W(mm) Width	H(mm) Height
100	360	250	250
160	400	250	250
250	500	270	270
400	650	310	310
630	750	340	340
800-1000	1200	420	350

Note:

Table 25-1 size is based on the size of common circuit breaker 3p/4p.

End tap box

Tai Sin LV series busway system tap boxes are used where a run of busway is fed by cable. we offer standard size end tap box (1m×1m×1m) while we also supply with nonstandard box according to the on-site measurement.

Flanged end with end tap box connection

The flange plate can be manufactured according to the size of the end tap box, it can be connected directly with end tap box.

Flexible link

L - 100mm to 500mm.

Note: All the dimensions provided are for standard products. Please contact our engineers for customized dimensions.

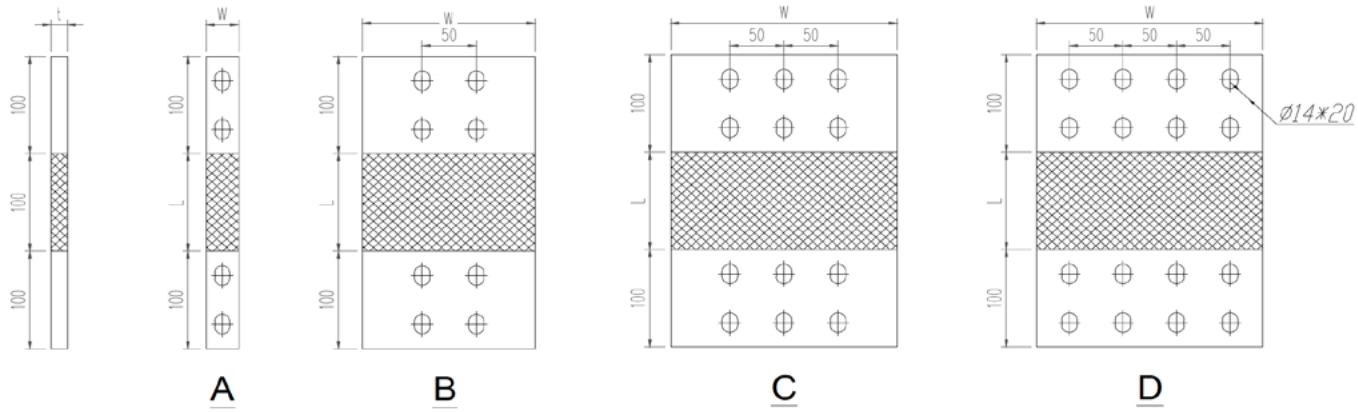

Rated current (A)	Copper busway size (mm)				Aluminium busway size (mm)			
	Bar imensions (W x H mm)	Thickness (mm)	No. of Flexible Link per Phase (N, L1, L2 & L3)	Type	Bar Dimensions (WxH mm)	Thickness (mm)	No. of Flexible Link per Phase (N, L1, L2 & L3)	Type
250	/	/	/	/	40 x 100	5	1	A
400	30 x 100	9	1	A	50 x 100	7	1	A
630	40 x 100	10	1	A	65 x 100	7	1	A
800	50 x 100	12	1	A	79 x 100	9	1	A
1000	65 x 100	11	1	A	104 x 100	9	1	B
1250	89 x 100	11	1	B	139 x 100	8	1	B
1350	/	/	/	/	139 x 100	8	1	B
1600	125 x 100	12	1	B	189 x 100	9	1	C
2000	159 x 100	12	1	B	104 x 100	10	2	B
2500	209 x 100	13	1	C	139 x 100	9	2	B
3200	119 x 100	14	2	B	189 x 100	11	2	C
4000	159 x 100	13	2	C	229 x 100	11	2	D
5000	209 x 100	14	2	D	/	/	/	/

**Design for reference only, customise to suit onsite requirement*

Installation

LV busway protection class can be up to IP66 according to different applications.

Notes:

IP40---"4" indicates that solid objects greater than 1mm in diameter will not penetrate the housing."0" denotes no protection.

IP42---"4" indicates that solid objects greater than 1mm in diameter will not penetrate the housing."2" denotes prevention of water

dripping inside by an angle of up to 15°.

IP54---"5" for dust, "4"indicates splashes of water.

IP65---"6" for dust density, "5" indicates protection from water spray.

IP66---"6" for dust density, "6" for protection of stronger water spray

Minimum clearance required for installation

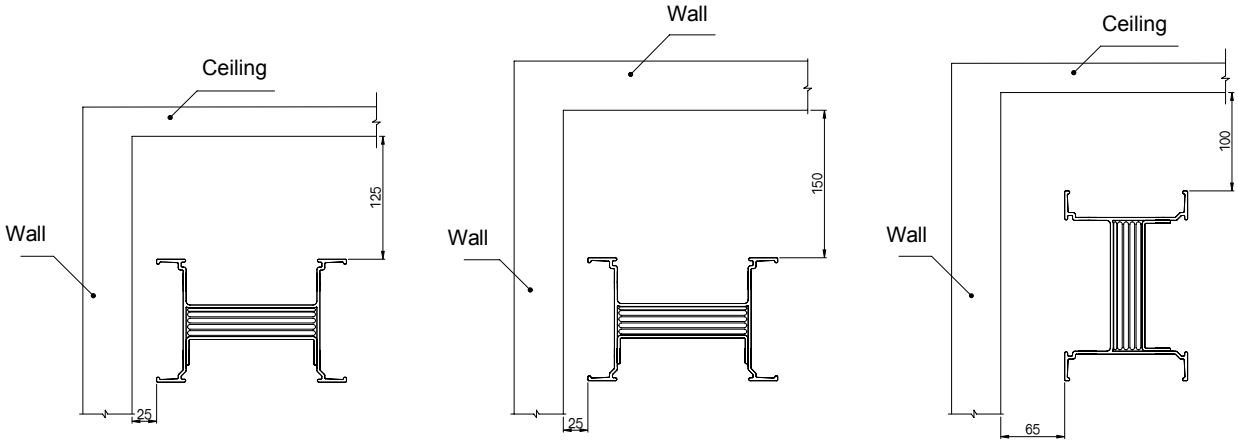

Minimum clearance required for plug-in box installation

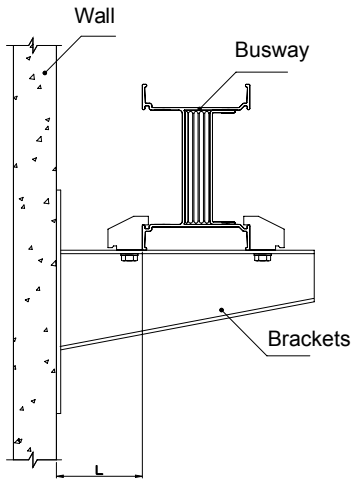

Current level for plug-in box	L(mm)
100	150
160	175
250	195
400	210
630	230
800	260
1000	300

Horizontal wall-through installation

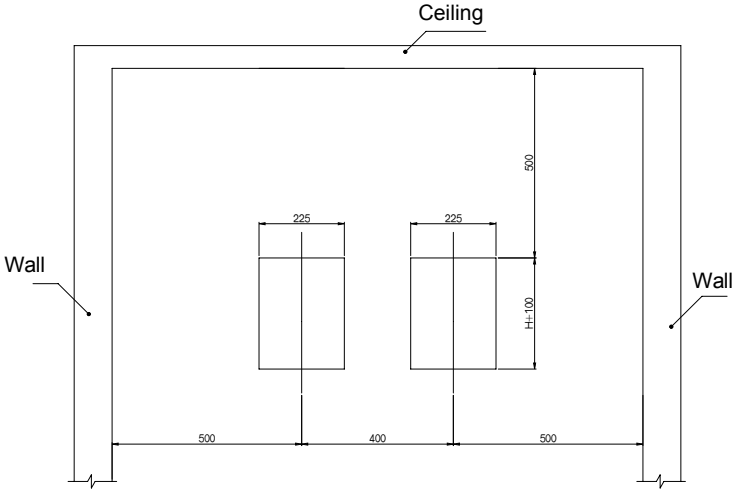

Horizontal installation-trapeze hangers Overhead Support

Holes should be first drilled in the floor so as to inlay steel expansion bolts (holes may also be drilled on site for flexible installation) or pre-bury steel U-channel for welding with hangers. The distance between two adjacent hangers shall not exceed 2m. Please specify any special requirements when placing your order.

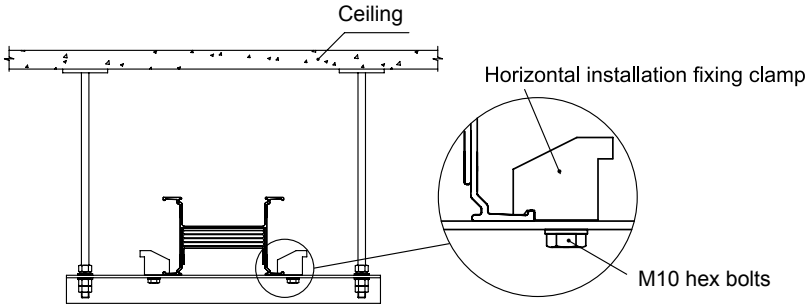

Flatwise installation

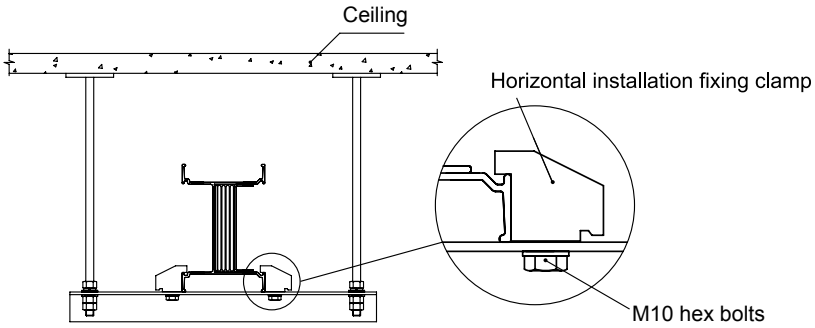

Edgewise installation

Horizontal installation-wall support

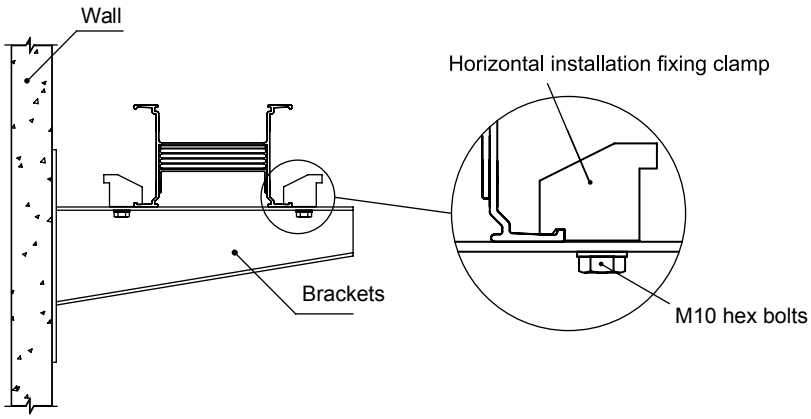

Flatwise installation

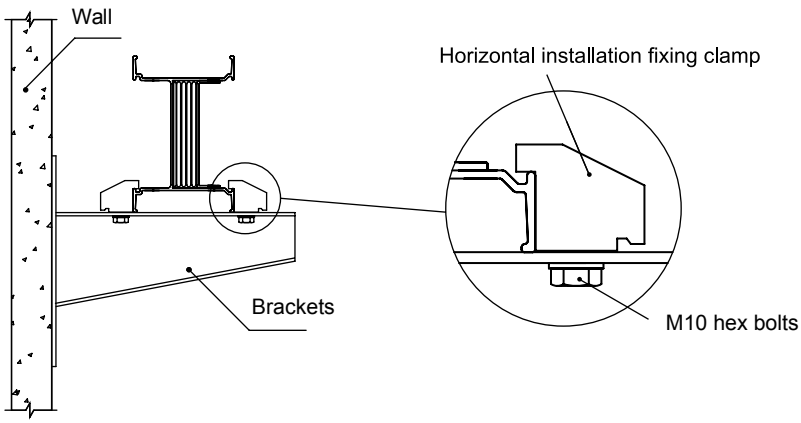

Edgewise installation

Vertical installation

When installing a vertical bus run, please refer to the figure for the dimension of the access holes. Please ensure that the spacing between every two runs of busway exceeds 350mm, especially if there are two or more vertical runs of busway installed in the same riser. Please refer to the figure below:

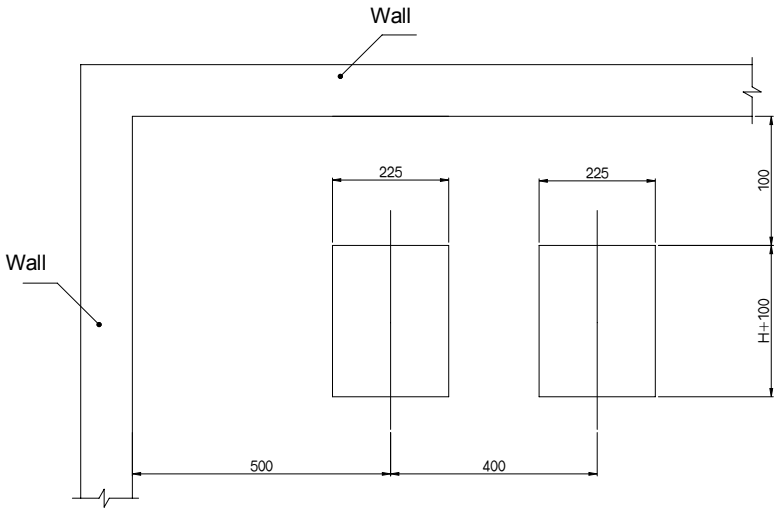

Installation for Vertical Spring Hanger

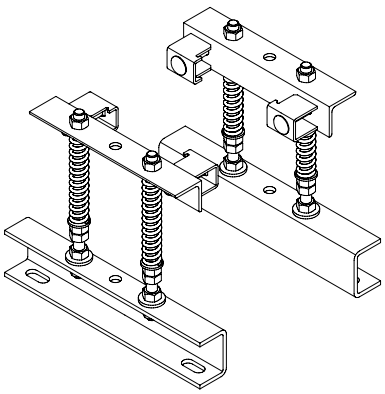

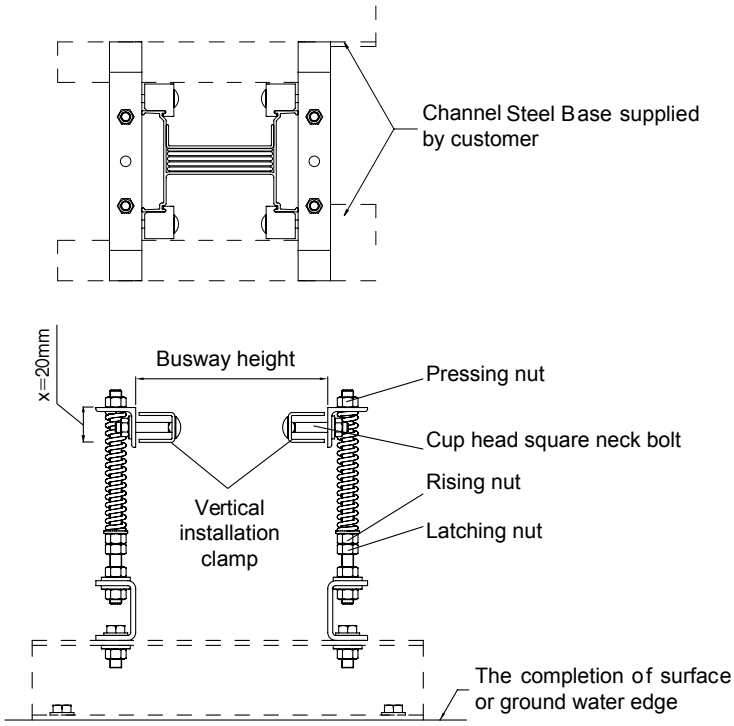

Installation Schematic Diagram

Installation for Vertical Fixed Hanger

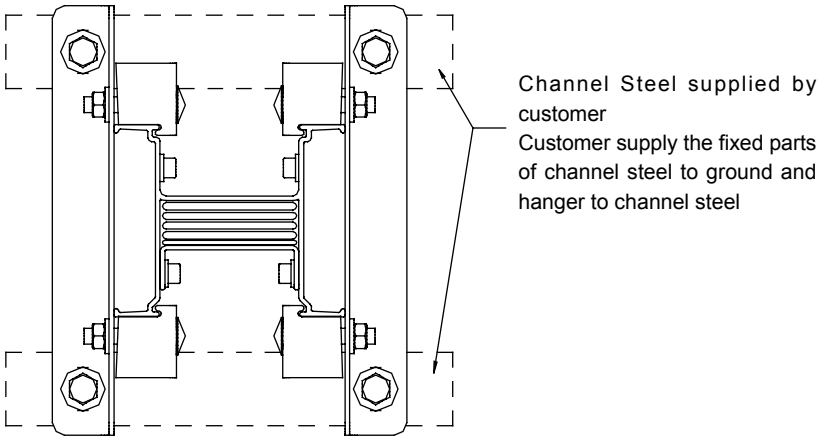

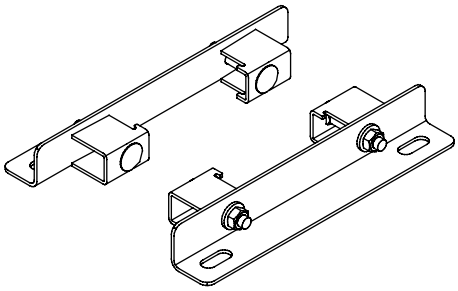

Vertical Fixed Hanger

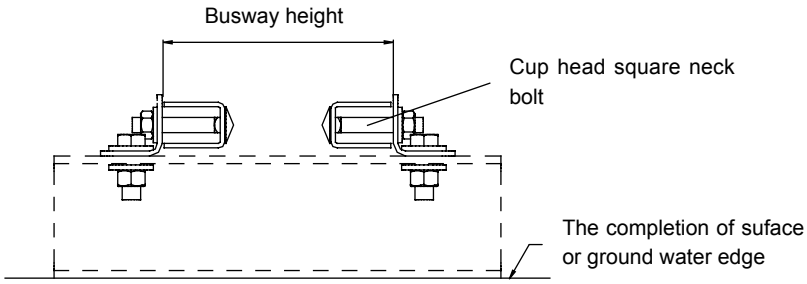

Installation Schematic Diagram

Ordering Information

Busbar trunking system purchase guide

Quotation Inquiry Form

- Model, rated current, rated voltage
- Plug-in busway or in feeder busway
- Characteristics of the power supply and protection degree
- Surface treatment and color and accessories
- Name, model, specifications, quantity of components and protection degree of the plug

Items	Details
Conductor Type	□copper conductor □aluminium conductor
Rated Capacity	□250A □400A □500A □630A □800A □1000A □1250A □1350A □1600A □2000A □2500A □3200A □3800A □4000A □4500A □5000A
Phase and Wire	□3P4W L1, L2, L3, N100% □3P5W L1, L2, L3, N100%, housing as PE □3P5W L1, L2, L3, N100%PE50%
Phase Sequence	□option 1 □option 2 □option 3 □option 4 □option 5 □option 6 □option 7 □option 8 □others
Frequency	□50Hz □60Hz
Voltage	□400V □690V
Protection Class	□IP40 □IP42 □IP54 □IP65 □IP66 □others
Colour	□light grey □light yellow □others
Product Type	□Plug-in straight length_____ M □Feeder straight length_____M
No. of Outlet	□1 □2 □3 □4 □5 □One side □Both side
Attachment	□L edgewise elbow (N-phase inward)_____ piece □ L edgewise elbow (N-phase outward)_____ piece
	□L edgewise elbow (N-phase upside)_____ piece □L edgewise elbow (N-phase underside)_____ piece
	□T edgewise elbow (N-phase inward)_____ piece □Tedgewise elbow (N-phase outward)_____ piece
	□T edgewise elbow (N-phase upside)_____ piece □T edgewise elbow (N-phase underside) _____ piece
	□terminal_____ piece □terminal busway _____ piece
	□transposition busway_____ piece □expansion busway_____ piece □phase conversion busway_____ piece
Plug-in box	□Isolating switch + fuze □MCCB □Rotary handle operation □Rotating crank operation
	Rated current: ___A___ pce ___A___ pce ___A___ pce ___A___ pce ___A___ pce ___A___ pce
	Rated current: ___A___ pce ___A___ pce ___A___ pce ___A___ pce ___A___ pce ___A___ pce
	Short Circuit Current
Support	□horizontal_____ pce □vertical_____ pce
Delivery date	
Transportation	
Destination Address	
Contact	
Special Requirements	

LV Busway System Numbering

Rated current		
AL	Cu	code
250	-	02
400	400	04
630	630	06
800	800	08
1000	1000	10
1250	1250	12
1350	-	13
1600	1600	16
2000	2000	20
2500	2500	25
3200	3200	32
4000	4000	40
-	5000	50

Conductor Material	
AL	A
Cu	C

Code	Conductor Structure
41	L1+L2+L3+N
51	L1+L2+L3+N+PE(enclosure)
52	L1+L2+L3+N+PE

Protection Class	
42	IP42
54	IP54
65	IP65
66	IP66

Physical Data	
Type	Dimension

Fire Screen
For Positioning of fire screen, please refer to the engineering design.

LV . .. . - ... +LV .. -F120-x(y)

Type (1) Type suffix (2)

For example; LVC045265-3 means:

Straight length with LV type busway, rated current of 400A, three phase five wire (with PE), IP65 and length of 3000mm.

Model: LV, current rating 400A, 5-wire system(with a separate PE), protection rating: IP65, length=3m

Code	Protection Class
42	IP42
54	IP54

Code	Busway system
41	LV...41
51	LV...42
52	LV...52

Code	Box specifications
1	1#
2	2#
3	3#
4	4#
5	5#
6	6#

Code	Rating of circuit breaker
63S	63A
80S	80A
100S	100A
125S	125A
160S	160A
200S	200A
250S	250A
320S	320A
400S	400A
630S	630A
800S	800A
1000S	1000A

Code	Poles of circuit breaker
3P	3 poles
4P	4 poles

Code	Type of operation
-	Without operating mechanism
R	Rotary operating handle
M	Motor operating mechanism

LV- . T .. .. / ...- .. - .

For example:

LV-3T5254/200S-3P-R means the plug-in box with specification of 3#, busway system of 52, protection rating of IP54, 3P breaker protection and rotary operating handle, rated current 200A.

Busbar Trunking System Specification

Products

1. General

1.1 The busbar trunking system (250A and above), both feeder and plug-in, shall be sandwich construction. All busbar trunking products and fittings (straight length, elbow, tees, flanged ends, cable tap box and circuit breaker, etc.) shall be in accordance with IEC 61439:2012 and from the same manufacturer as the busbar trunking system. The degree of protection of the busbar trunking system should be minimum IP54 in accordance to IEC 60529 for indoor application & minimum IP68 for outdoor application.

1.2 For Outdoor application, in addition it shall be tested & comply to IEC 61439-6 Clause 10.2.4 – Resistance to ultra-violet (UV) radiation.

1.3 Rated operation voltage of the busbar trunking is 690V, 3 – Phase, full neutral with 50% capacity continual internal earth busbar. The neutral conductor should have the same cross-sectional area as the phase conductor. The earth busbar must be one continuous piece without bolting on housing.

2. Certificate and Quality Assurance

2.1 The manufacturer shall be ISO 9001, ISO 14001 and OHSAS 18001certified by an international certification organization.

2.2 The busbar of full range should pass full type tests specified in IEC 61439:2012 or UL857, and achieve KEMA KEUR or ASTA Diamond or UL CLASSIFIED certificate. The production line of plant shall be periodically inspected by the above mentioned testing authorities in order to guarantee final product quality and certification shall be traceable for validity.

2.3 A product safety mark (e.g. KEMA-KEUR, ASTA DIAMOND, UL CLASSIFIED) should be on the product offering a visible assurance to all of full product safety testing, factory inspection and ongoing surveillance under an independent authority to ensure the ongoing safety of product.

2.4 The busbar trunking system should be fully recyclable.

2.5 Apart from the standard Factory Routine Test, additional Factory acceptance test shall be perform in Singapore prior to delivery to site so to ensure integrity of the busbar & accessories are not affected during shipment.

3. Short Circuit Ratings and Dielectric Test

3.1 The whole busbar trunking system shall be capable of withstanding the short circuit of the electrical installation without damaging the electrical, mechanical and thermal stress under fault condition at a service voltage of 690V 50Hz. The minimum rated insulation voltage shall be 1000V.

3.2 Each piece of busbar shall be tested dielectric performance in the factory & Singapore test facility under 3.5KV AC for 1 second as per IEC or 7.5KV DC for 10 second before dispatch.

4. Housing

4.1 The busbar trunking housing should be constructed of serrated surface design of extruded aluminium housing of >2mm thickness to improve heat dissipation & reduce hysteresis & eddy current loss and the radiated magnetic field around busway. The electromagnetic radiation should be less than 500μT for long time exposure and 100μT for short time exposure respectively.

4.2 The busbar trunking housing shall be totally enclosed non-ventilated for protection against mechanical damage and dust accumulation. The mechanical withstand external impact ability should reach IK10.

4.3 The busbar trunking housing should be provided with a suitable protective finish & pass at least 500 hours salt spray test to ensure the anticorrosion ability.

4.4 The housing shall be of not more than two-piece housing construction.

5. Busbars and Insulation

5.1 Conductors shall be 99.9% high purity copper with silver/ tinned plated for all contact surface. The conductivity shall be not less than 98% IACS.

5.2 There shall be no bolts passing through the busbars of the busway.

5.3 Busbar shall be insulated with Class B Insulation rated at 130deg C(Class B). Insulation shall be of hygroscopicity of <1% with test report & in addition it shall be self-extinguishing in accordance to IEC 61439-6.

6. Joint

6.1 The busbar trunking joint shall be of the one-bolt type which utilizes a high strength steel bolt(s) and Belleville washers to maintain proper pressure over a large contact surface area.

6.2 The bolt shall be two-headed design to indicate when proper torque has been applied and require only a standard long handle wrench to be properly activated.

6.3 It shall be possible to remove any joint connection assembly to allow electrical isolation or physical removal of a busbar trunking length without disturbing adjacent busbar trunking lengths.

6.4 It shall have double contact surface for phase and neutral conductors inside joint pack to enlarge the contact area by 50%, ensure lower resistance, low temperature rise and higher safety application.

6.5 Each busway joint shall allow for a length adjustment of +/- 6mm.

6.6 Each Joint shall come with Colour-coded temperature indicator to give an early warning when high temperature occurs at the joint. In addition, the adhesiveness of the indicator shall be tested to ASTM D 1000.

7. Voltage Drop and Temperature Rise

7.1 The voltage drop (input voltage minus output voltage) specified shall be based on the busbar operating at full rated current and at stabilized operating temperature.

7.2 The three-phase line-to-line voltage drop shall not exceed 4% at full connected load

7.3 The temperature rise at any point of the busbar trunking enclosure shall not exceed 55deg C rise above ambient temperature (35deg C) when operation at rated current.

7.4 The busbar trunking system shall be designed for horizontal edge, horizontal flat and vertical mounting without de-rating of the current carrying capacity.

8. Fire Resistance

8.1 The busbar shall be fire resistant as per IEC 61439-6 in the event of fire.

8.1.1 The busway should resist the smoke to spread and prevent further penetration of fire as per IEC61439-6 clause 10.102.

8.1.2 The busway shall be resistant to flame propagation as per IEC61439-6 clause 10.101.

8.1.3 All plastic materials of busway shall not burn or cause burning when affected by abnormal heat or by fire, it should be self-extinguish materials as per IEC61439-6 clause 10.2.3.2.

8.2 The busway shall be zero halogen, not generate any toxic emission and ensure very low smoke in the event of fire.

8.3 For essential /emergency life safety circuits, which supply power to firefighting equipment, the circuit integrity shall be maintained in the event of fire. The fire rated busway shall be verified & tested to BS6387:2013 in Singapore.

9. Plug-in Opening

9.1 The connecting jaw of the plug-in unit shall plug directly onto the full thickness of the busbar and have full contact with busbar itself.

9.2 All contact on joint and plug-in opening should be silver/tinned plated copper.

9.3 It shall be possible to inspect the plug-in opening and busbars prior to the installation of the plug-in units.

9.4 Plug-in Opening shall be of hot plug design (up to 600A rated) that allows plug-in Units to be installed & removed during “LIVE” condition & shut down is not required to ensure continuity of supply is not disrupted.

10. Plug-in Units

10.1 Complete plug-in units with MCCB should be tested separately as per IEC61439-6 and achieve the certificate issued by an international independent testing authority (e.g. ASTA, KEMA or UL). The brand and type of MCCB shall be indicated on the certificate and be supplied by the same manufacturer of busbar.

10.2 The earthing contact of the plug-in unit shall always be made before that of the live conductors and the last to break during removal. And it must connect to the earth bar of busway to ensure the safety. The earth connecting bar of plug-in units shall be silver/tinned-plated.

10.3 All plug-in units should be compatible for full range of busway and the same plug-in opening. All plug-in units shall be interchangeable without alteration or modification of plug-in duct.

10.4 Covers of all plug-in units must have interlocks to prevent the cover from being opened when the switch is in the ON position.

10.5 The plug-in units shall be equipped with internal barriers to prevent accidental contact of fish tape and conductors with live parts on the line side of the protective device during time of wire pulling.

10.6 The measurement and communication of plug-in unit should be provided as standard functions.

11. Site Acceptance Test

11.1 The contractor shall be trained & certified by Manufacturer to provide the listed site test against the submitted check list or factory test report.

The site acceptance test shall include the following;

Visual & Test inspection

i) Trunking alignment

ii) Support spaced as recommended by manufacturer

iii) Tap-off unit & component check

iv) Joint alignment & tightening torque

v) Phase check

vi) Continuity test

vii) Insulation resistance test

FAQs

1/ What is the typical warranty coverage of Busbar Trunking System?

Typical warranty coverage is 12 months, coverage on manufacturer defects.

2/ What is the typical Life Span of Busbar Trunking System?

20 years

3/ What is the maintenance frequency of Busbar Trunking System?

Busbar Trunking System is designed to be maintenance-free. As a recommendation, the maintenance frequency will be once a year or after any fault occurrence

4/ What is the solution for Outdoor Busbar Trunking System installation?

Cast resin type Busbar Trunking System with IP68 rating is recommended for Outdoor Application

5/ Can Busbar Trunking System be installed underground?

No, due to maintenance requirement

6/ What is typical leadtime of Busbar Trunking System?

10-12 weeks upon approval & confirmation of shop drawings, Factory Routine Test Conducted in Singapore

7/ How fast can we receive the add on items as the project is closing soon?

10-12 weeks upon approval & confirmation of shop drawings, Factory Routine Test Conducted in Singapore

8/ Is Tai Sin Busbar able to intergreate with other Busbar Trunking Systems?

No, Busbar Trunking System is a proprietary design system, hence integration will have to be of the same make & model in order to be compatible.

9/ Is the certification validity & range traceable?

Cerification is only traceable for full type test under Kema with Kema Keur, Asta with Asta Diamond or UL with UL Classified.

10/ What is the critical test to ensure Busbar Trunking System complied ?

There are 3 level of test to ensure integrity of the Busbar Trunking System:

- Level 1 - Type Test by accredited test laboratories (One time type test to ensure compliance to guideline standards - IEC 61439-6)
- Level 2 - Factory Acceptance / Routine Test (Factory internal quality routine test)
- Level 3 - Site Acceptance Test (Conducted during installation phase)

Updated Busbar FAQs

https://www.taisin.com.sg/our-products/busbar-trunking-system/#busbar-faqs

Catalogue serial number: TSPDLV2021-01

(Updated as at August 2021)

Tai Sin Power Distribution Pte Ltd
Address: 24 Gul Crescent, Singapore 629531
Tel: +65 6672 9292 Fax: +65 6861 4084
Website: www.taisin.com.sg